KRINGS KS 60

General data

Shoring length		2.00 m–3.50 m
Base unit height		2.00 m / 2.40 m
Top unit height		1.30 m
Pipe culvert height		1.00 m / 1.36 m
Base box weight		980 kg–1,580 kg
Shoring width		variable
Rec.: mobile or crawler excavator	Base box only: With top unit:	12–18 t 18–30 t

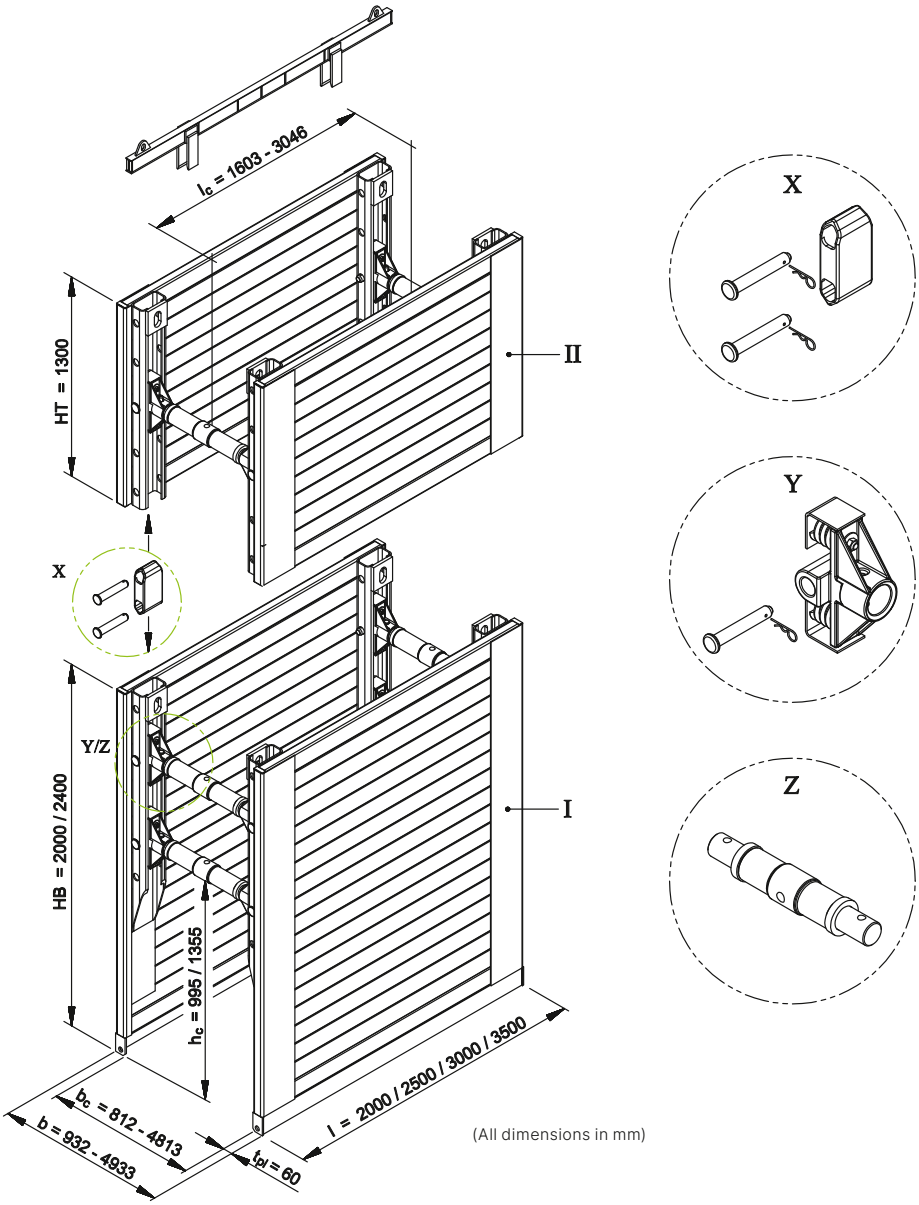

(All dimensions in mm)

I	Base unit	l	Length	h_c	Pipe culvert height	Z	Spindle 98 × ...
II	Top unit	l_c	Pipe culvert length	t_{pl}	Panel thickness		
HB	Base unit height	b	Shoring/trench width	X	Connector with bolts		
HT	Top unit height	b_c	Clear width	Y	Spring socket with bolts		

Base units

Art. no.	l [m]	h [m]	t_{pl} [m]	h_c [m]	l_c [m]	G / VP [kg]	G / Box [kg]	A [m²]	e_h [kN/m²]
131 030	2.00	2.00	0.06	1.00	1.61	350.0	980.0 *	4.00	59.5
131 035	2.50	2.00	0.06	1.00	2.11	420.0	1,120.0 *	5.00	39.7
131 060	3.00	2.00	0.06	1.00	2.61	460.0	1,200.0 *	6.00	26.3
131 080	3.50	2.00	0.06	1.00	3.05	560.0	1,400.0 *	7.00	26.6
131 040	2.00	2.40	0.06	1.36	1.61	394.0	1,068.0 *	4.80	39.1
131 050	2.50	2.40	0.06	1.36	2.11	460.0	1,200.0 *	6.00	31.3
131 070	3.00	2.40	0.06	1.36	2.61	515.0	1,310.0 *	7.20	26.1
131 090	3.50	2.40	0.06	1.36	3.05	650.0	1,580.0 *	8.40	22.3

Other sizes or custom-made products on request. * With spindle 98 × 700

Top units

Art. no.	l [m]	h [m]	t_{pl} [m]	h_c [m]	l_c [m]	G / VP [kg]	G / Box [kg]	A [m²]	e_h [kN/m²]
131 120	2.00	1.30	0.06	-	1.61	260.0	702.0 *	2.60	66.7
131 130	2.50	1.30	0.06	-	2.11	295.0	772.0 *	3.25	39.7
131 150	3.00	1.30	0.06	-	2.61	330.0	842.0 *	3.90	26.3
131 170	3.50	1.30	0.06	-	3.05	395.0	972.0 *	4.55	26.6

Other sizes or custom-made products on request. * With spindle 98 × 700

Shoring widths for spindle 98 × 550

Art. no. extension bar	l [m]	b_c [m]	b [m]
138 280 (spindle 98 × 550)	w/o	0.81–1.01	0.93–1.13
139 430	0.30	1.11–1.31	1.23–1.43
139 445	0.50	1.31–1.51	1.43–1.63
139 385	1.00	1.81–2.01	1.93–2.13
139 400	1.50	2.31–2.51	2.43–2.63
139 420	2.00	2.81–3.01	2.93–3.13
139 425	2.50	3.31–3.51	3.43–3.63

Shoring widths for spindle 98 × 700

Art. no. extension bar	l [m]	b_c [m]	b [m]
138 290 (spindle 98 × 700)	w/o	0.99–1.33	1.11–1.45
139 430	0.30	1.29–1.63	1.41–1.75
139 445	0.50	1.49–1.83	1.61–1.95
139 385	1.00	1.99–2.33	2.11–2.45
139 400	1.50	2.49–2.83	2.61–2.95
139 420	2.00	2.99–3.33	3.11–3.45
139 425	2.50	3.49–3.83	3.61–3.95

l	Length	b_c	Clear width	t_{pl}	Panel thickness	G / VP	Weight / shoring panel
l_c	Pipe culvert length	h	Panel height	A	Surface	G / Box	Weight / shoring box
b	Trench width	h_c	Pipe culvert height	G	Weight	e_h	Admissible soil pressure

Accessories and spare parts, see p. 41–43